KT-5194 DC Motor PID Speed Controller

- Serial, Button or Analog Control
- Open Loop PWM Speed Control
- PID Closed Loop Control
- 16x2 Alphanumeric LCD
- Photo-Interrupter Drive
- Dual IRFZ44 MOSFET Output
- Schmitt Trigger Pulse Input
- Four Unique Addresses

The DC Motor PID Speed Controller is a DC motor speed controller for motors up to 20A. It features open loop PWM control and closed loop PID control. Closed loop control is achieved with the included Photo-Interrupter to provide a pulse input for rotation.
All settings for the motor speed controller can be altered using the simple 3 button interface and LCD or via the serial port of a PC, using the supplied program.

Connections:

V+	- Motor Positive input Voltage
M+	- Motor Positive
M-	- Motor Negative
V-	- Motor Negative input Voltage
Vs	- 12V Controller Power Supply Input
COM	- Common Power Supply Connection
OUT	- Photo-Interrupter Drive Output
IN	- Photo-Interrupter Signal Input
5V	- 5V Output for Analog input
AIN	- 0-5V Analog input
COM	- Common (Ground)

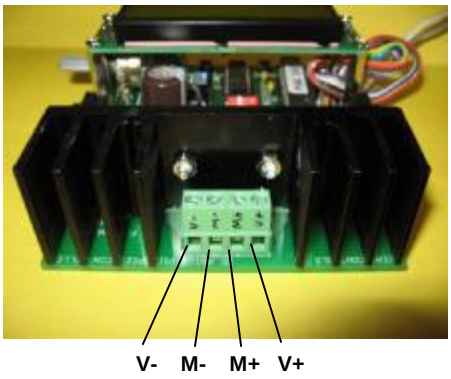

Note: Motor Power Supply must be connected to the V- and V+ terminals. If you are using separate power supplies then their negative terminals must be connected to a common ground for the motor controller to work properly.

Serial Connections:
The motor controller's settings can be altered using its serial port. Each motor controller can have one of four addresses, thus allowing for up to four controllers on a single serial port.
Controller addressing is achieved using the 2-way DIP switch. The address is the sum of the numbers on the switch which are turned on, hence addresses are 0, 1, 2 and 3.
The motor controller features two D9 connectors. Using straight through Male to Female 9-pin serial cables, multiple controllers can be attached to the same serial port without the need to make custom cables.

Menu Structure:
All screens display the speed that the motor is running at on the top line.
The lower line displays the options for setting the speed and other controller settings.
The different screens are selected by using the buttons labeled "**<**" and "**>**", and settings can be altered by using the "**E**" (Enter) button.
When the "**E**" button is pressed the value being altered will return to is lowest possible value and a cursor will appear under the last character of the editable value.
When the cursor is present, pushing the "**>**" button will increase numerical values by the lowest amount and pushing the "**<**" button will multiply numerical values by 10.
Non numerical parameters are simply altered by using the "**>**" button to scroll through the options.
Once the parameter has been set to the desired value, press the "**E**" button again to store this value.
Example:
To set the Target speed in PID control mode to 10,000 rpm
Select the "**Target**" screen using the "**<**" and "**>**" buttons.
Press the "**E**" button. The value should now change to "**0.0**" and a cursor should appear under the final 0.
Press the "**>**" button and the value will change to "**0.1**".
Press the "**<**" button five times. Each time the value should increase by a factor of 10.
The value should now read "**10000.0**".
Push the "**E**" button to save the value to memory, the cursor should now disappear.

Settings:
The following options appear in the menu.

Target (or PWM%): The target speed for PID control or the PWM percentage for open loop control
PID P: The PID Proportional Gain
PID I: The PID Integral Gain
PID D: The PID Derivative Gain
Max Sp: The Maximum speed of the motor
Min PWM: The Minimum allowable PWM Duty
Max PWM: The Maximum allowable PWM Duty
Accel: The Acceleration/Deceleration step for PWM ramping
Time: The time interval for PID error and time between PWM Acceleration steps
Division: The number of pulses per revolution for the photo interrupter
Analog: When "ON" Target speed or PWM% is controlled by the analog input
Auto Start: When "ON" the motor will begin turning immediately when power is supplied
Det Max: Turning this to "ON" will ramp the motor up to maximum speed for 10 time intervals and will determine the maximum speed of the motor
Run Motor: When "ON" the motor will be allowed to turn
Control: Select "PID" for closed loop PID speed control or "PWM" for open loop PWM control

Serial Settings:
Motor controller parameters can also be set using the serial interface of a PC and a straight through 9-pin serial cable. The supplied program can be used or a simple program can be written to alter the parameters. If you are going to write your own program, or alter the settings using a terminal program, the port settings should be 19200 baud, 8 Data Bits, No Parity and 1 Stop Bit.
Commands follow the structure
@0A CMND VAL CRLF
Where
A is the address 0 to 3, as set by the dip switches.
CMND is the Command as in the table below.
VAL is the numerical value for the parameter.
CRLF is Carriage Return Line Feed (Enter Key)
Example:
To set the Target speed of the motor controller with address 00 in PID mode to 10,000 rpm the following command would be used:
@00 SSPD 10000 (Enter)
The unit will respond with:
#00 SSPD 10000

Command	Description	Values
SSPD	Set Speed	>0
GPID	PID Proportional Gain	0 to 10
IPID	PID Integral Gain	0 to 10
DPID	PID Derivative Gain	0 to 10
MMAX	Motor Maximum Speed	>0
MINP	Minimum PWM Duty	0 to 100 (<=MAXP)
MAXP	Maximum PWM Duty	0 to 100 (>=MINP)
ACCN	PWM Acceleration	1 to 100
TIME	Time Interval	>0
DIVN	Input Division	1 to 255
ANLG	Analog input	0=OFF 1=ON
AUTO	Auto Start	0=OFF 1=ON
DMAX	Determine Maximum	1=Start
RUNM	Run Motor	0=OFF 1=ON
PIDC	Control	0=PWM 1=PID
STRT	Start Motor	No parameter
STOP	Stop Motor	No parameter

Notes:
The IRFZ44 Mosfet has a maximum current of 49A, voltage of 55V and an on resistance of 17.5mΩ. In reality the Mosfets will overheat and the PCB tracks will not handle this much current. As two are used it can be assumed that for a motor current of 20A, each Mosfet will be conducting approximately 10A. This means that each Mosfet will dissipate approximately 1.75W into the heatsink. The provided heatsink is rated at 5°C/W which will mean a temperature increase of approximately 17.5°C above ambient. A fan will help with the heat dissipation if the motor is going to draw this much current continuously.
The PWM signal controlling the Mosfets is available at a PCB pad labeled PWM to the right of the Mosfet labeled Q2. If you wish this PWM output can be used to drive a solid state relay or other higher current capable FET.
If you wish to just monitor the PWM output of the controller a 50% duty signal is available on an unlabeled PCB pad next to pin 15 of the ATMega168 IC. This can be used as a sync input for your oscilloscope and the PWM output can be monitored from the PWM pad.

Assembly:
Assembly of the DC Motor PID Speed Controller is relatively simple, however there are a few things to note.
Start with the lowest components first, the resistors and diodes and then work your way up to the taller components.
Note that R5, near the regulator is not 4.7kΩ as printed on the PCB but actually 240Ω, which is provided.
Leave the LCD, Potentiometer, Mosfets and large heatsink until last.
The small heatsink goes between the voltage regulator VR1 and the PCB, on the exposed metal area. You may wish to use some heat transfer compound between the heatsink and the PCB as well as between the heatsink and VR1. Pre-bend the regulators legs so that it will lie flat against the heatsink. Insert the screw from underneath the board, through the board, heatsink and voltage regulator. Tighten the nut and then solder the legs of the regulator.
For the Mosfets and large heatsink, loosely attach the two Mosfets to the heatsink using the screws and nuts and heat transfer compound then insert the Mosfets into the PCB. You will notice that the heatsink will not sit flush with the board but a few millimeters above, with its legs through the holes, approximately level with the underside of the board. Tighten the nuts holding the Mosfets to the heatsink and then solder the Mosfets and the heatsink to the PCB.
The Potentiometer can be mounted directly on the PCB in place of the 3-way terminal block, or the terminal block can be inserted to the PCB and the potentiometer can be mounted externally and wired to the terminals.
The LCD is mounted above the PCB on 25mm tapped spacers. To do this attach the spacers to the PCB using screws and then place the LCD module above and screw it into place. The two 14 way right angle IDC connectors need to be soldered on to the LCD and main PCB and these are connected using the 14 way sockets and ribbon cable.

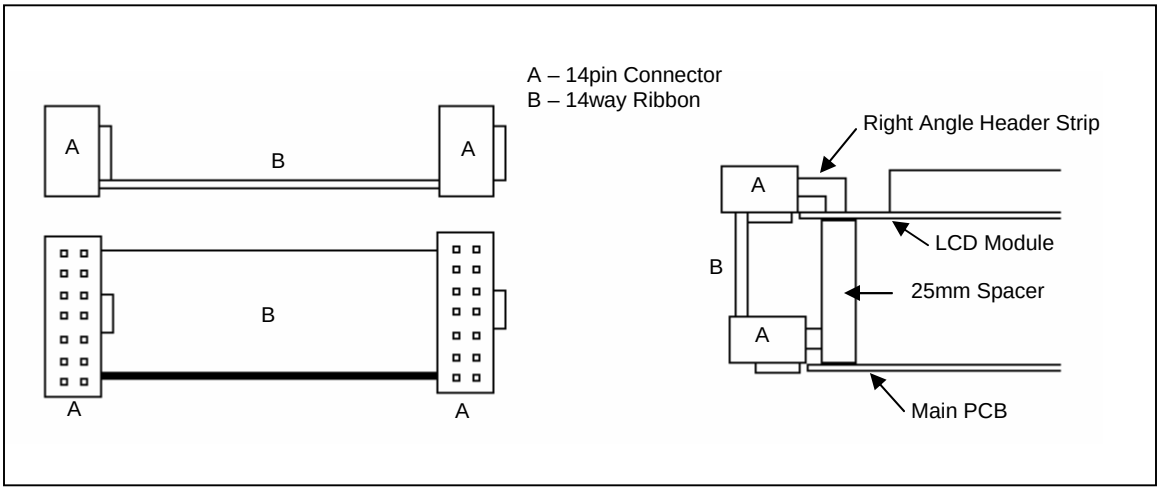

Parts List:

Part	Designator	Quantity
10R Resistor	R1,R2	2
1N4004 Diode	D3	1
1N4148 Diode	D1	1
18K Resistor	R3	1
10K Resistor	R4,R6-R8	4
1K Resistor	R9	1
240R Resistor	R5	1
22pF Cap Ceramic	C1,C2	2
0.1uF Cap 50V Monobloc	C3-C8	6
1uF Cap 63V Low ESR	C9-C12	4
470uF Cap 50V Low ESR	C13	1
DB9 Female Right Angle	K2	1
DB9 Male Right Angle	K3	1
2 way DIP switch	SW1	1
Max232	U3	1
74HC14	U2	1
7805 Regulator	VR1	1
8MHz Crystal	X1	1
14pin Socket		3
16pin Socket		1
Tact Switch	1,2,3	3
Large Heatsink		1
Small Heatsink		1
14 way IDC Ribbon		50mm
10mm M3 bolt		3
M3 Nut		3
6mm M3 Bolt		8
25mm Tapped M3 Spacer		4
10K 16mm Potentiometer		1
2way Terminal	T2-T5	4
3way Terminal	T6	1
14pin IDC cable socket		2
Right Angle Dual Header Strip 2x7pins	K4	2
Photo Interrupter		1
16x2 LCD		1
IRFZ44 MOSFET	Q1,Q2	2
FR302 Fast Recovery Diode	D2	1
ATMega168 Programmed	U1A,U1B	1
PCB		1

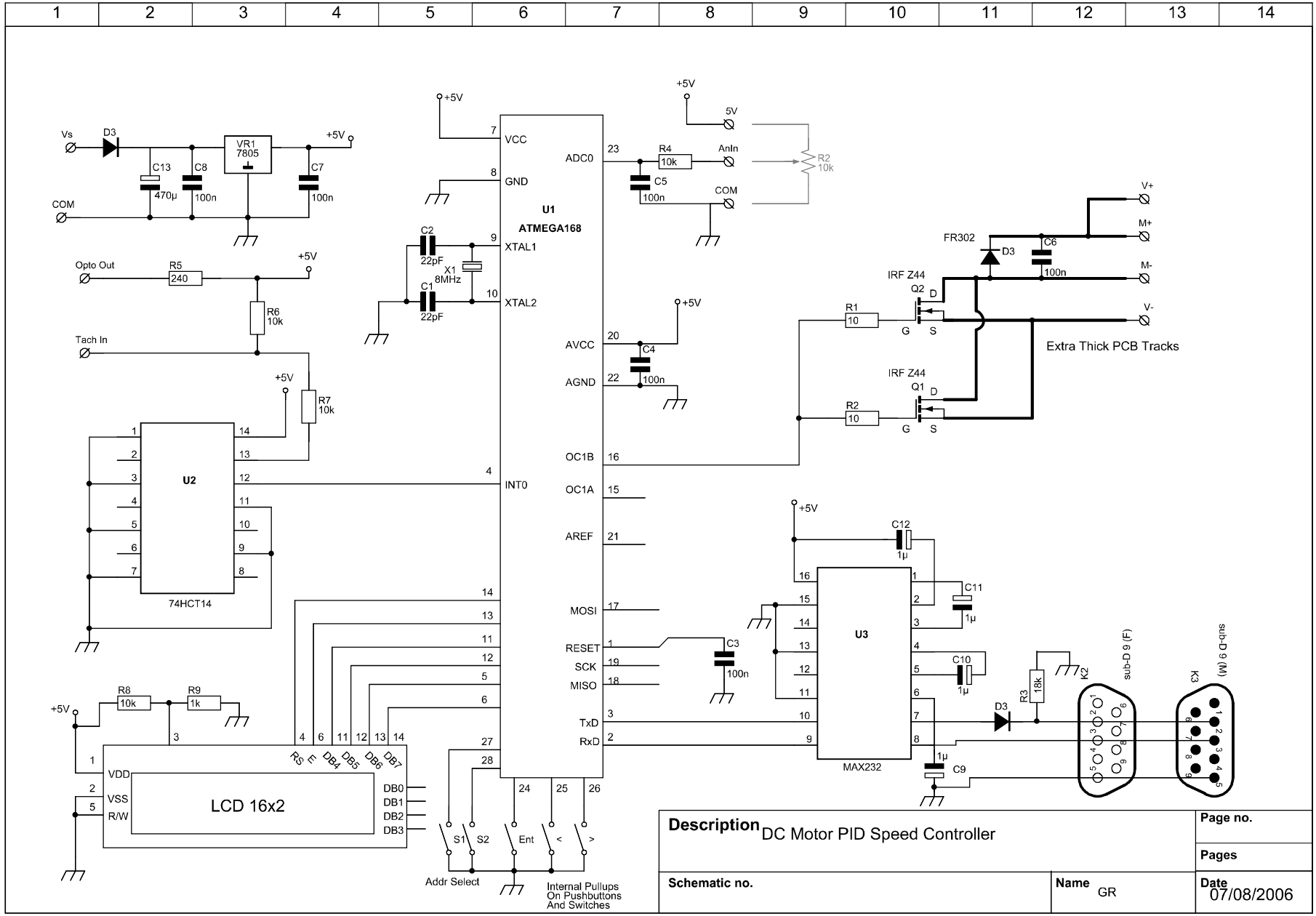
1 2 3 4 5 6 7 8 9 10 11 12 13 14
Vs
D3
VR1
7805
+5V
C13
470µ
C8
100n
C7
100n
COM
Opto Out
R5
240
R6
10k
Tach In
R7
10k
U2
74HCT14
+5V
VCC
GND
U1
ATMEGA168
XTAL1
XTAL2
C2
22pF
X1
8MHz
C1
22pF
INT0
ADC0
AVCC
AGND
OC1B
OC1A
AREF
MOSI
RESET
SCK
MISO
TxD
RxD
R4
10k
AnIn
C5
100n
COM
5V
R2
10k
C4
100n
R1
10
R2
10
IRF Z44
Q2
Q1
D
G
S
FR302
D3
C6
100n
V+
M+
M-
V-
Extra Thick PCB Tracks
C3
100n
C12
1µ
C11
1µ
C10
1µ
C9
1µ
U3
MAX232
D3
R3
18k
K2
sub-D 9 (F)
K3
sub-D 9 (M)
R8
10k
R9
1k
VDD
VSS
R/W
LCD 16x2
RS
E
DB4
DB5
DB6
DB7
DB0
DB1
DB2
DB3
S1
S2
Ent
<
>
Addr Select
Internal Pullups
On Pushbuttons
And Switches
Description
DC Motor PID Speed Controller
Page no.
Pages
Schematic no.
Name
GR
Date
07/08/2006